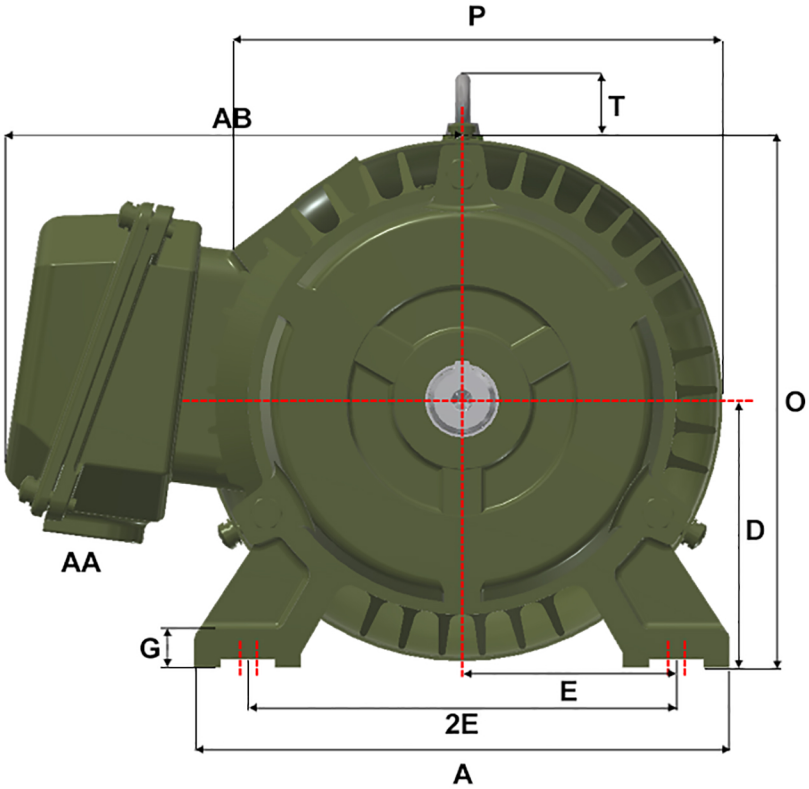

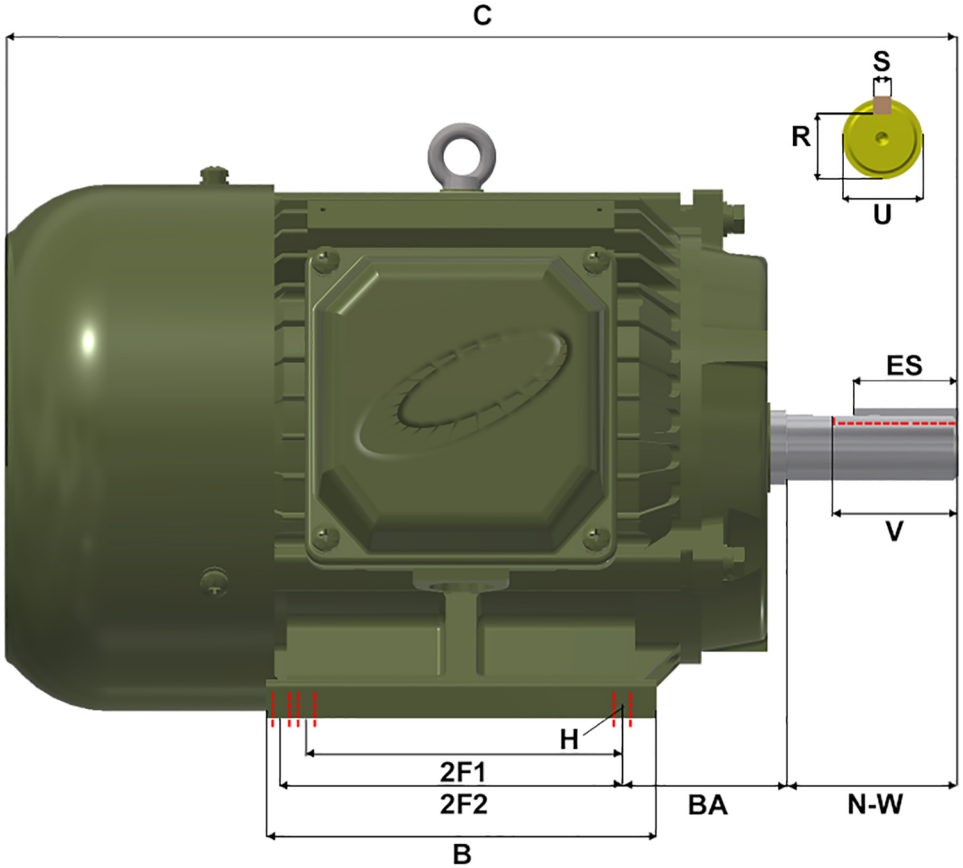

Version: 2WTI			Revised: 08-10-2019			HP	RPM	FRAME	ENCLOSURE	MPP/MQP-61		
Customer is responsible in determining that Max Motion product will fit/perform suitably in the intended application						50	3600	326TS	TEFC			
A	**B**	**C**	**D**	**E**	**2E**	**2F1**	**2F2**	**G**	**H**	**O**	**P**	**R**
15.50	**14.70**	**29.80**	8.00	6.25	12.50	10.50	12.00	**1.00**	6 X 0.66	**15.90**	**15.70**	1.591
S	**T**	**U**	**V**	**AA**	**AB**	**BA**	**ES**	**N-W**				
0.50	**2.60**	1.875	3.50	2 NPT	**12.30**	5.25	2.03	3.75				